Finitura / Finishing

Cromo / Chrome
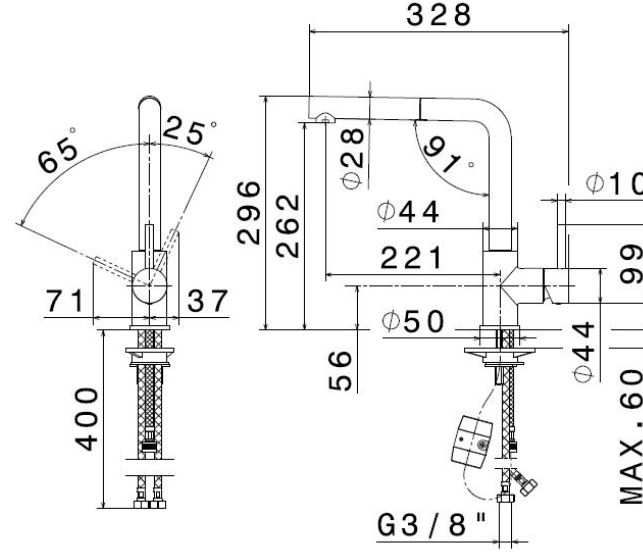
Nichel spazzolato
Brushed nickel